SANITARY SEWER 4'-0" DIAMETER PRECAST CONCRETE MANHOLE

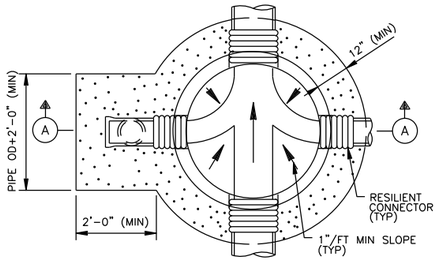

FOUNDATION PLAN

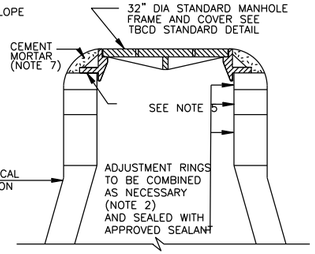

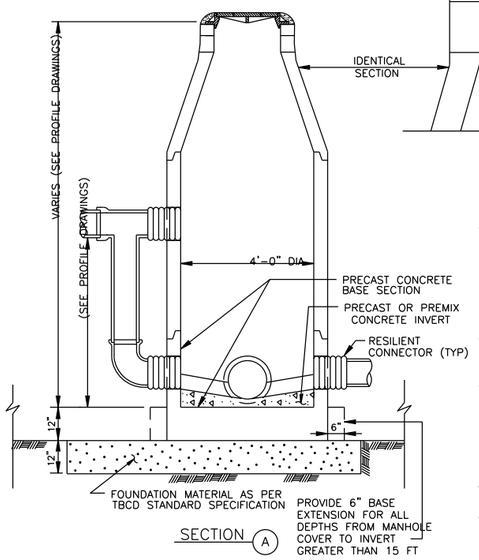

SECTION (A)

NOTES:

1. DEPTH OF MANHOLE DETERMINES SECTIONS REQUIRED.
2. PRECAST CONCRETE RINGS SHALL BE PROVIDED FOR A COMBINED ADJUSTMENT HEIGHT OF AT LEAST 12". THE TOTAL HEIGHT OF THE ADJUSTMENT RINGS SHALL NOT EXCEED 1'-6".
3. MANHOLE WALL THICKNESS FOR DEPTH EXCEEDING 12'-0" SHALL BE DETERMINED TO MEET LOADING CONDITIONS. MIN THICKNESS 5".
4. MANHOLE DROP AND INTERSECTING PIPES SHALL BE INSTALLED ONLY WHEN CALLED FOR IN PLAN AND PROFILE DRAWING.
5. SEAT MANHOLE FRAME IN SEALANT PER TBCD STANDARD SPECIFICATION.
6. ECCENTRIC PRECAST CONCRETE MANHOLE MAY BE USED.
7. OMIT CEMENT MORTAR WHEN MANHOLE IS LOCATED IN PAVED AREAS.
8. MIN REINFORCING IN THE PRECAST CONCRETE BASE SHALL BE # 5 @ 8 EW.
9. PROVIDE BACKFILL TO MATCH ADJACENT PIPE TRENCH BACKFILL PER TBCD STANDARD SPECIFICATION.

SANITARY SEWER 5'-0" TO 8'-0" DIAMETER PRECAST CONCRETE MANHOLE

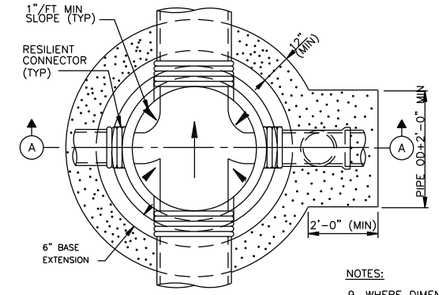

FOUNDATION PLAN

NOTES:

9. WHERE DIMENSIONAL RESTRICTIONS DICTATE THE MANHOLE BASE HEIGHT SHALL BE ADJUSTED TO HAVE THE UPPER INLET PIPE OF THE DROP ENTER INTO THE 4'-0" DIAMETER RISER SECTION.

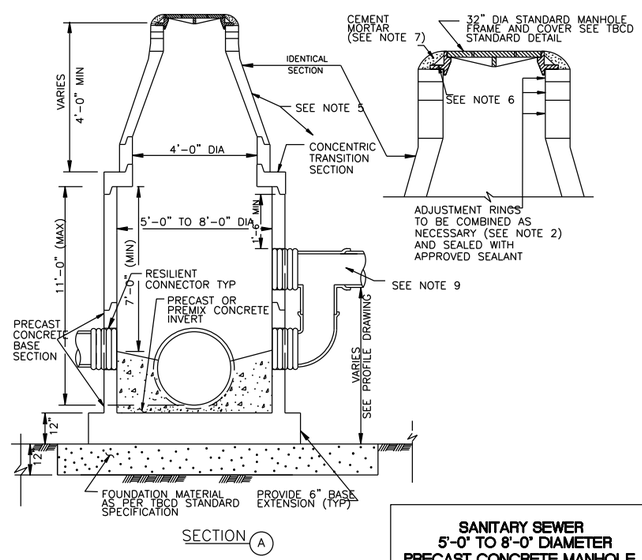

SECTION (A)

SANITARY SEWER CORROSION RESISTANT MANHOLE FOR FORCE MAIN DISCHARGE

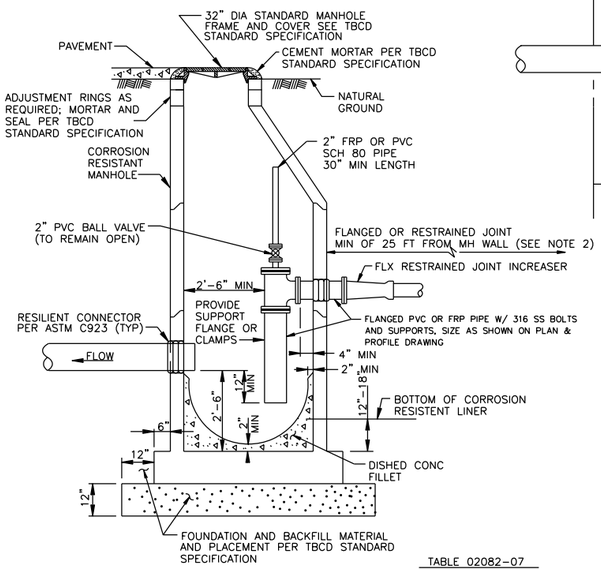

ELEVATION VIEW

TABLE 02082-07

MANHOLE DIAMETER	4'-0"	5'-0"	6'-0"
MAX DISCHARGE SIZE	6"	14"	24"

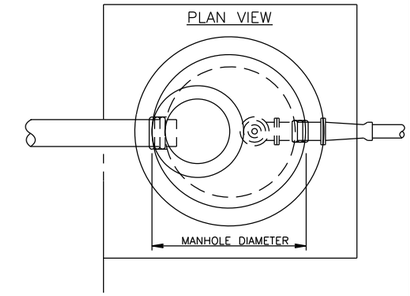

NOTES:

1. SEAT MANHOLE FRAME IN SEALANT PER TBCD STANDARD SPECIFICATION.
2. IF FORCE MAIN HAS BENDS WITHIN 25 FT OF MANHOLE, EXTEND RESTRAINED JOINTS TO 25 FT MINIMUM UPSTREAM OF BEND.
3. OMIT CEMENT MORTAR WHEN MANHOLE IS LOCATED IN PAVED AREA.
4. MINIMUM REINFORCING IN BASE SHALL BE 5 @ 8 E W.
5. PRECAST RINGS SHALL BE PROVIDED FOR A COMBINED ADJUSTMENT HEIGHT OF AT LEAST 12". THE TOTAL HEIGHT OF THE ADJUSTMENT RINGS SHALL NOT EXCEED 1'-6".

NOTES TO SPECIFIER:

1. INDICATE SIZE OF FORCE MAIN, INCREASER AND DISCHARGE EITHER ON THIS DETAIL OR ON PLAN AND PROFILE.
2. PROVIDE INVERT ELEVATIONS OR FORCE MAIN AND SEWER CONNECTIONS TO MH, ON THIS DETAIL OR PLAN AND PROFILE.
3. THIS DETAIL IS TO BE USED ONLY WHEN THERE ARE NO INTERSECTING GRAVITY SEWERS.
4. DETAIL MAY BE REVISED TO ORIENT INCOMING FORCE MAIN AT OTHER ANGLES RELATIVE TO GRAVITY SEWER.
5. IF LENGTH OF DISCHARGE DROP BELOW FLANGED TEE FITTING EXCEEDS 7 TIMES DISCHARGE DIAMETER, PROVIDE STAINLESS STEEL OR FRP PIPE SUPPORT.

SANITARY SEWER MANHOLE VENT

NOTES:

1. INSTALL AT LOCATION AND BASED ON 100-YR FLOOD ELEVATION SHOWN ON PLAN AND PROFILE DWGS.
2. DRAIN TO VENTED (ADJACENT) MH AT MIN 1% SLOPE. CONNECT TO MANHOLE WITH SPECIFIED CONNECTOR.
3. THE VENT IS TO BE INSTALLED WITHIN THE RIGHT OF WAY.
4. EXPOSED FRP PIPE REQUIRES PROTECTIVE COATING.
5. VENT SHOULD BE LOCATED AWAY FROM TRAFFIC AREA.

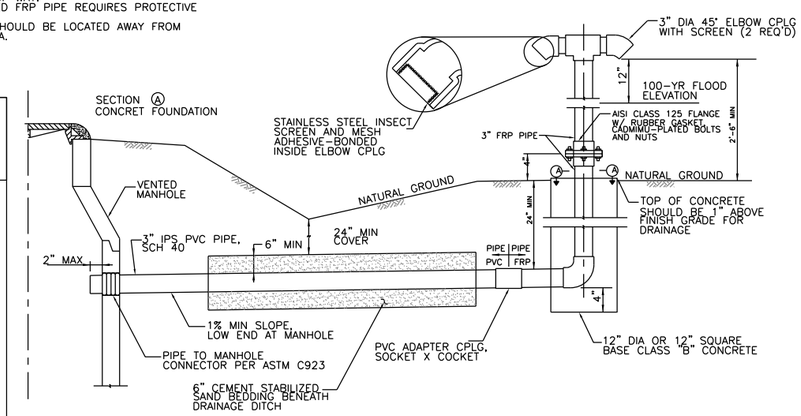

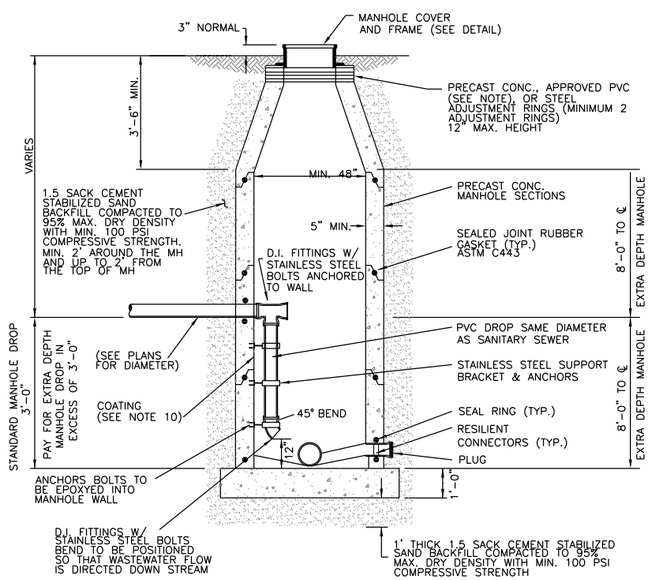

STANDARD PRECAST CONCRETE SANITARY SEWER MANHOLE AND INTERNAL DROP

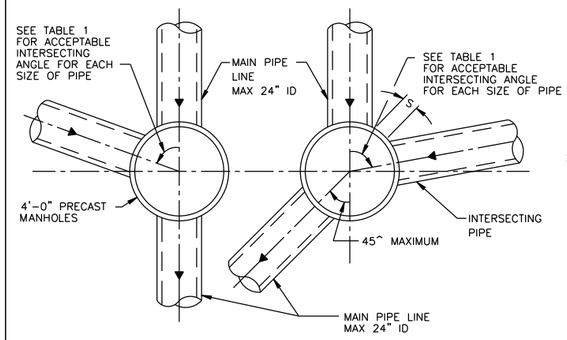

MAX 24" ID MAIN PIPE ALLOWED FOR STRAIGHT THROUGH TO 45^ DEFLECTION

MIN ANGLE AND INTERSECTING PIPE SIZES FOR A 4'-0" DIA MANHOLE

INTERSECTING PIPE SIZE (INCHES)	MIN INTERSECTING ANGLE IN DEGREES FOR FOR VARIOUS MAIN PIPE SIZES IN INCHES							
	6"	8"	10"	12"	15"	18"	21"	24"
6	55	58	60	65	70	75	80	85
8		60	63	68	73	77	82	87
10			66	71	75	80	85	90
12				76	80	85	90	–
15					85	90	–	–
18						–	–	–
21							–	–
24								–

NOT APPLICABLE UNLESS HYDRAULICS DICTATE (INTERSECTING PIPE > MAIN PIPE)

SANITARY SEWER 4'-0" DIAMETER PRECAST CONCRETE MANHOLE NOTES

NOTES TO SPECIFIER:

1. "–" INDICATES THAT A SPECIAL DESIGN OR THE NEXT LARGER MANHOLE SIZE SHALL BE USED.
2. TABLE 1 IS BASED ON A MIN SEPARATION DISTANCE "S" OF 15.5" OR INTERSECTION PIPE OD/2, WHICHEVER IS GREATER, BETWEEN MAIN AND INTERSECTING PIPES ALONG THE MANHOLE INSIDE WALL ARC.
3. PIPE WALL THICKNESS USED IN TABLE 1 ARE BASED ON RCP. THE DESIGN ENGINEER MAY CALCULATE TO SEE IF THINNER WALL PIPES CAN MEET THE SEPARATION CRITERIA FOR ANGLES SMALLER THAN THE TABLE ALLOWS.

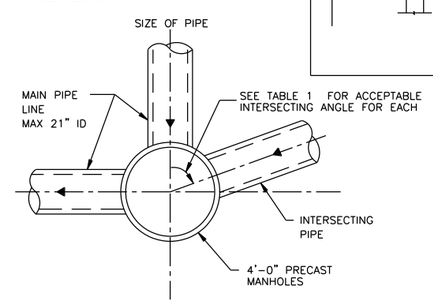

MAX 21" ID MAIN PIPE ALLOWED FOR 45^ TO 90^ DEFLECTION

PLACE ENGINEERING SEAL HERE

Mont Belvieu
TEXAS

Sanitary Sewer Standard Details

Scale: NTS

DWG No: 200 – 01

SHEET 1 OF 3