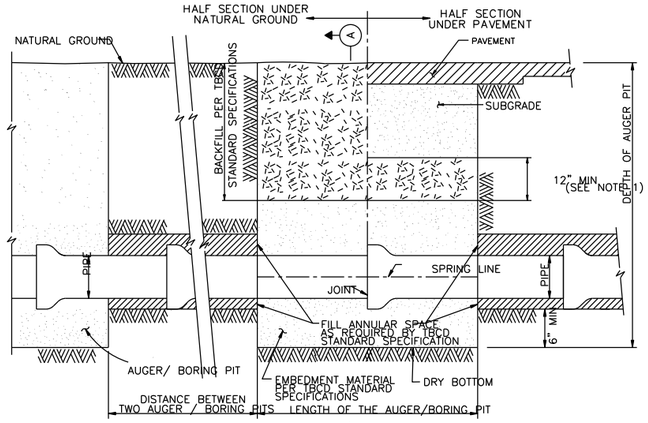

ELEVATION

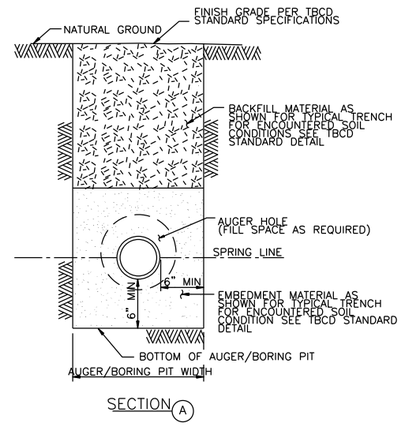

SECTION (A)

NOTE:

1. SELECT BACKFILL FOR RIGID PAVEMENT; FLEXIBLE BASE MATERIAL FOR ASPHALT PAVEMENT.

BEDDING AND BACKFILL AUGER / BORING PIT AND HOLE

NOTES:

1. THIS DETAIL MAY BE USED ONLY FOR DRY STABLE TRENCH CONDITIONS PER TBCD STANDARD. SEE TBCD STANDARD SPECIFICATION FOR REQUIREMENTS IN OTHER CONDITIONS.
2. MIN TRENCH WIDTH SHALL BE PIPE OD PLUS AN ALLOWANCE "A" FOR THE NOMINAL PIPE SIZE:

NOMINAL PIPE SIZE	"A"
18" TO 30"	24"
OVER 30"	36"

3. MAX TRENCH WIDTH SHALL BE NOT GREATER THAN MIN TRENCH WIDTH PLUS 24 INCHES, UNLESS OTHERWISE NOTED.
4. MIN BEDDING DEPTH SHALL BE THE GREATER OF ? OD OR 6 INCHES.
5. ALTERNATIVE EMBEDMENT BACKFILL MATERIALS FOR FORCE MAINS MAY BE ALLOWED. SEE COH STANDARD SPECIFICATIONS.
6. SELECT BACKFILL FOR RIGID PAVEMENT; FLEXIBLE BASE MATERIAL FOR ASPHALT PAVEMENT.
6. DIMENSIONS NOTED WITH "?" SHALL BE SPECIFIED BY PROJECT ENGINEER.

BEDDING AND BACKFILL FOR DRY STABLE TRENCH

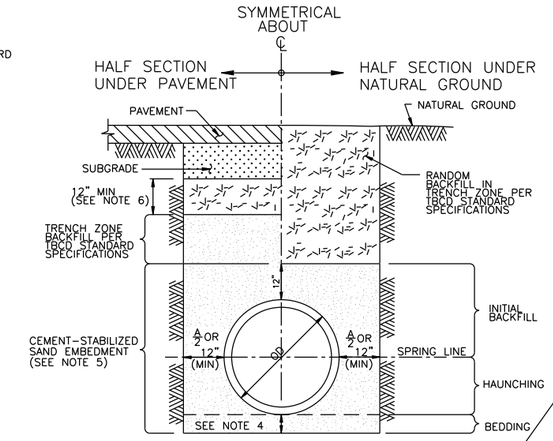

TYPICAL CROSS-SECTION

RESIDENTIAL CLEAN OUT

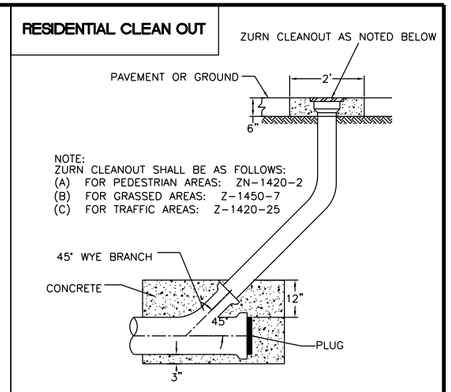

NOTE:
ZURN CLEANOUT SHALL BE AS FOLLOWS:
(A) FOR PEDESTRIAN AREAS: ZN-1420-2
(B) FOR GRASSED AREAS: Z-1450-7
(C) FOR TRAFFIC AREAS: Z-1420-25

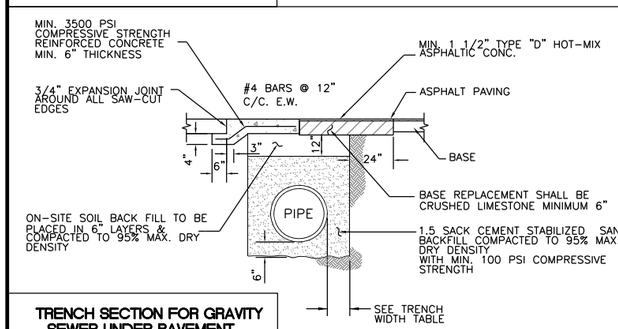

TRENCH SECTION FOR GRAVITY SEWER UNDER PAVEMENT

NOTES:

1. NECESSITY FOR USE OF THIS SECTION TO BE DETERMINED BY THE ENGINEER AS CONSTRUCTION PROGRESSES AND MAY BE MODIFIED BY THE ENGINEER TO SUIT CONDITIONS ENCOUNTERED.
2. WELL POINTS TO BE INSTALLED AND TRENCH KEPT DRY DURING CONSTRUCTION UNTIL BACKFILL IS COMPLETELY PLACED AS APPROVED BY ENGINEER.

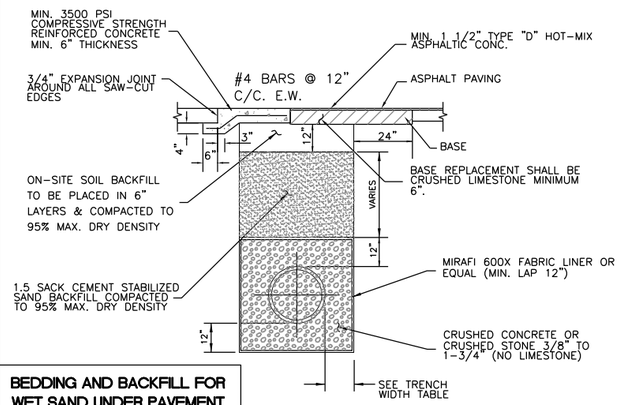

BEDDING AND BACKFILL FOR WET SAND UNDER PAVEMENT

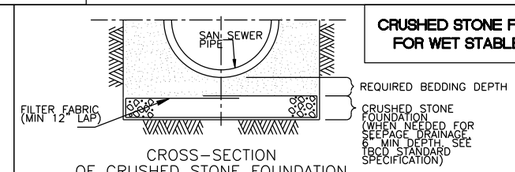

CROSS-SECTION OF CRUSHED STONE FOUNDATION

CRUSHED STONE FOUNDATION FOR WET STABLE TRENCH

NOTES:

1. ACTUAL SHAPE OF CONCRETE TRENCH DAM CROSS SECTION MAY BE DETERMINED BY CONTRACTOR IN FIELD MEETING MINIMUM THICKNESS AND KEY DEPTH REQUIREMENTS.
2. THIS DETAIL SHALL BE USED WITH CEMENT STABILIZED SAND EMBEDMENT, OR OTHER CLASS II EMBEDMENT IN WET STABLE TRENCH CONDITIONS.
3. PLACE TRENCH DAMS IN CLASS I EMBEDMENTS AT THE MIDPOINT OF LINE SEGMENTS LONGER THAN 100 FEET BETWEEN MANHOLES.

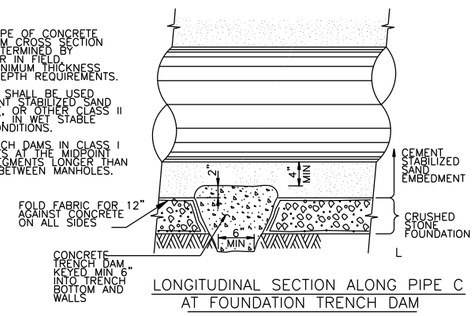

LONGITUDINAL SECTION ALONG PIPE C AT FOUNDATION TRENCH DAM

BACKFILL OF SHAFTS

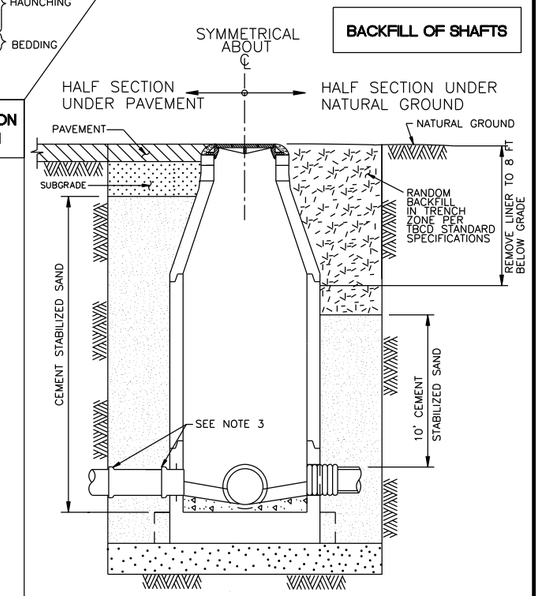

TYPICAL CROSS – SECTION

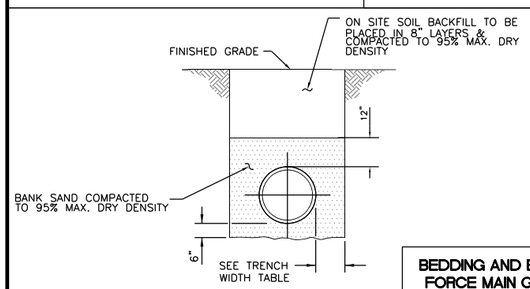

BEDDING AND BACKFILL FOR FORCE MAIN UNDER PAVEMENT

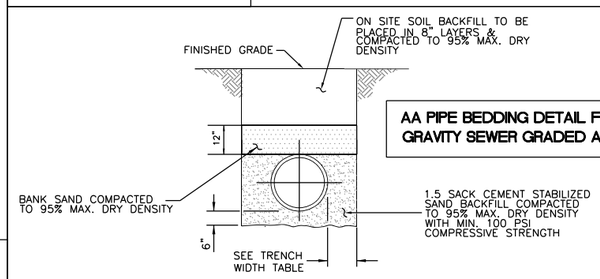

AA PIPE BEDDING DETAIL FOR GRAVITY SEWER GRADED AREA

Options for eliminating drop off near interception

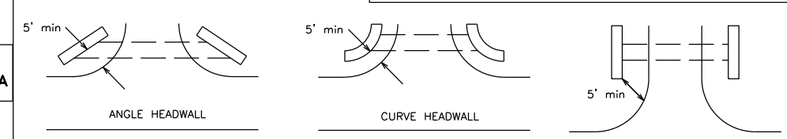

ANGLE HEADWALL

CURVE HEADWALL

MOVE HEADWALL AWAY FROM INTERCEPTION

NOTES:

1. GROUTING OF MANHOLE STRUCTURE ANNULAR SPACE WILL BE PERMITTED IN CASES WHERE INSUFFICIENT WORK SPACE EXISTS FOR PLACEMENT AND COMPACTATION OF CEMENT STABILIZED SAND, PER TBCD STANDARD SPECIFICATION FOR TUNNEL GROUT.
2. THIS DETAIL ALSO APPLIES TO BACKFILL OF SHAFTS WITHOUT STRUCTURES.
3. ARRANGE PIPE JOINTS AS SHOWN WHEN USING RIGID CONNECTION TO CAST IN PLACE MANHOLE BASE.

BEDDING AND BACKFILL FOR FORCE MAIN GRADED AREA

BEDDING AND BACKFILL FOR WET SAND GRADED AREA

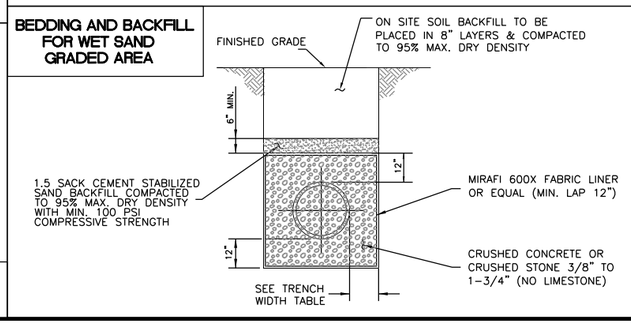

PLACE ENGINEERING SEAL HERE

Mont Belvieu
TEXAS

Sanitary Sewer Standard Details

Scale: NTS

DWG No: 200 – 02

SHEET 2 OF 3